OWNER's MANUAL

STC *Rev.3* - SUPER TIMER

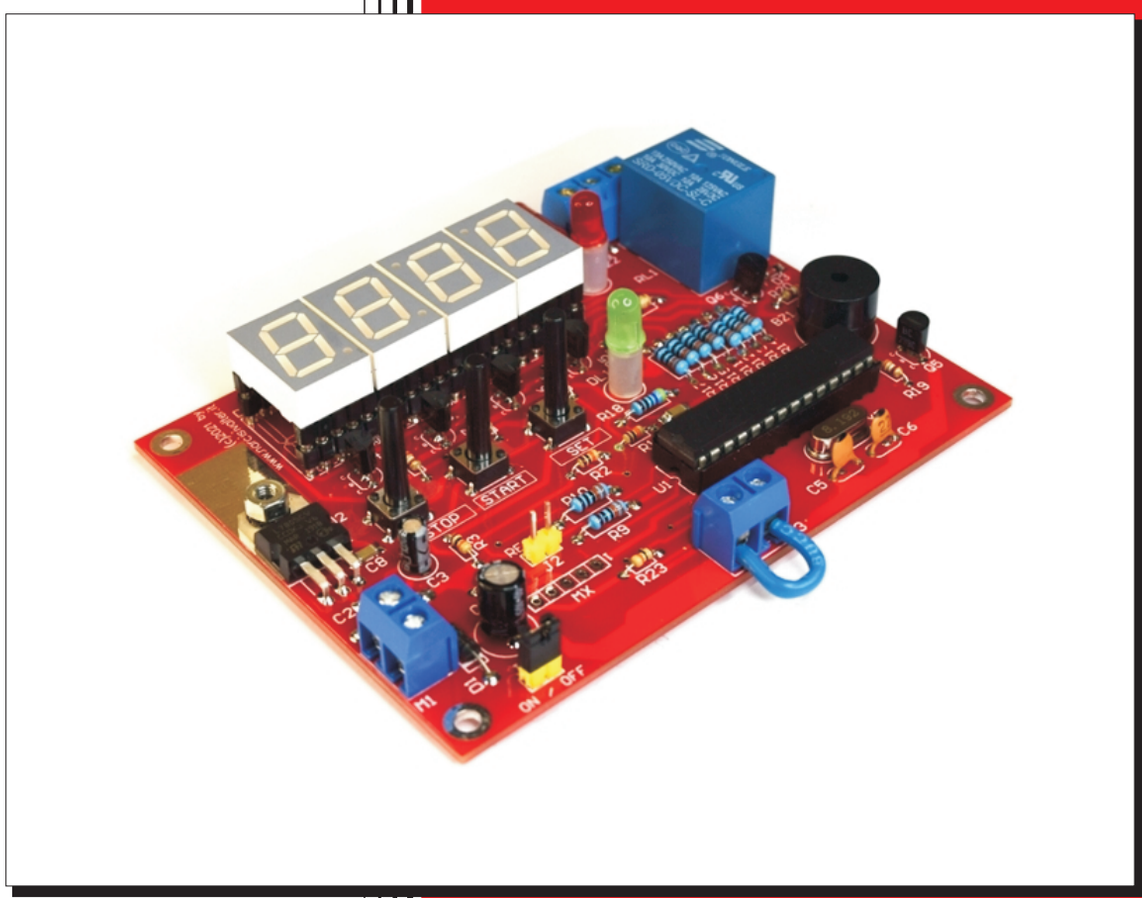

STC *Rev.3*

Programmable Timer for Exposure Box or Photography Darkroom

based on PIC16F886 DIP28

©2021 by Valter Narcisi
www.narcisivalter.it

AVVERTENZE DI SICUREZZA E CONDIZIONI D'USO (SCHEDA NUDA): Questo manuale si riferisce a una scheda elettronica fornita esclusivamente in versione nuda, priva di contenitore e di isolamento esterno (open-frame). Si tratta di una realizzazione artigianale in pezzo unico o tiratura limitata, priva di certificazione e marcatura CE, da considerarsi come sub-assemblaggio o modulo sperimentale destinato unicamente all'integrazione in altri apparati o all'uso in ambiente di laboratorio da parte di personale qualificato.

PERICOLO ELETTRICO: I collegamenti e l'utilizzo del modulo descritti in questo manuale possono comportare tensioni pericolose e il rischio di folgorazione, cortocircuito o incendio. L'acquirente/utente è l'unico responsabile del corretto isolamento elettrico del circuito, del suo montaggio in un contenitore idoneo a norma di legge, del rispetto delle tensioni d'esercizio e dell'inserimento di adeguate protezioni da sovracorrente (fusibili). L'autore declina ogni responsabilità civile e penale per malfunzionamenti, lesioni o qualsiasi danno diretto o indiretto a cose o persone derivante dall'uso, dal cablaggio o dall'installazione della scheda stessa.

STC*Rev3* - SUPER TIMER

FEATURES

- Input Voltage: **12Vdc** (± 10%)
- Management with **Microcontroller** (PICmicro 16F886 DIP28)
- **Time** can be set from **1s**ec. to **99m**in. **59s**ec.
- **Quartz** precision
- **Count-Down** Timer
- **Easy** to use
- 3 control buttons: **START** **STOP** and **SET**
- Installed **10A/250V Relay** and 3 way screw Terminal Block (**NC - Com - NO**)
- **Buzzer on-board** for signalling counting end and for audio scanning of the seconds
- The time and setting are **stored** in the controller's Eeprom, retrieved during Power ON
- **Red LED** for showing the **LOAD ON**
- **Green LED** for showing the Timer **Ready**
- Displaying: **4 x Display** 7-segment (0.59" - 13 mm.)
- Can be used like a multipurpose timer, **Exposure** light box, **Darkroom** photography, etc.
- Board dimensions (mm.): **100 x 76**

STC*Rev3* - SUPER TIMER

USER's GUIDE

This **SUPER TIMER** manages times from **1 SECOND** up to **100 MINUTES** (**MM:SS** format) and the values to be programmed are in steps of 1 SECOND.

After Power ON, the **Timer** displays the last value programmed by the user and by pressing the **START** button, the relay is activated (RED LAMP ON) and the Timer begins to count down. At the end of programmed time, the value "00:00" appears on the display, the relay is deactivated, the RED LED turns off and the buzzer emits 5 beeps.

If there is a **black out**, the Timer switches off completely and the relay deactivates: when the power is restored, the Timer displays the last value programmed by the user and it is ready to be activated again by pressing the **START** button.

DEFAULT VALUE AT FIRST USE

When Power ON, the display always shows **the last value programmed by the user**: if the Timer never been used, after Power ON the Timer automatically sets the following default value:

02:00 (Relay active for 2 minutes)

The **Audio-Scan** (of the seconds), by default is disabled and therefore set to 0.

THE COMMAND BUTTONS

START / RESUME

This button is for starting the Timer. The Timer can ONLY started if the **GREEN LED is ON** (**Ready**). When the **START** button is pressed, the Timer activates the relay and starts the countdown starting from the value programmed by the user. During the countdown, the **RED LED is ON** to indicate that the relay is activated.

STOP / RESET

This button, pressed once, set the **Timer** in PAUSE and deactivates the relay. To restart the Timer (and eventually, reactivate the relay), press the **START** button otherwise, a second press of the **STOP** button stops and definitively resets the Timer, ready to be started again.

SET *(Programming)*

Press this button to enter the **PROGRAMMING** mode.
The second time you press the **SET** button, you exit the **PROGRAMMING** mode.

N.B. *- The entry in **PROGRAMMING** mode is possible ONLY when the Timer is ready (GREEN LED ON). If the Timer does not enter **PROGRAMMING** mode, check that it's not in paused or check if the GREEN LED is ON: if necessary, press the **STOP** button to reset the Timer (the GREEN LED turns ON).*
*During a PAUSE (i.e. after pressing the **STOP** button once), the **RED LOW DOT** on the display is ON.*
While programming, the display indicates the position of the 4 digits with the lighting of the low segments.

- **Choose the single DISPLAY and the VALUE TO PROGRAM** (only **PROGRAMMIN mode**)
  The **START** and **STOP** buttons have a double function: when you enter the **PROGRAMMING mode**, these buttons allow you to choose a single Display and the value to be entered on the selected Display as described below:

  ○ Button ▶ (**START**): each time this button is pressed, a display lights up one at a time, from left to right. The lit display is the one in which the digit to be programmed is entered. After the fourth Display, a further press of the button restarts the sequence from the first Display and so on.

  ○ Button ▲ (**STOP**): each time this button is pressed, a digit from **0** to **9** is entered on the selected display: when the value is **9**, by pressing the button again, it restarts from **0** and so on.

THE DISPLAY

During the operation of the Timer, one or both **RED DOTS** may light up on the display: in addition, the GREEN and RED LEDs will ON to indicate different situations. The following list provides a brief description of all possible situations.

BOTH DOTS ARE ON *(Timer Ready)*

Indicate that the Timer is ready to be started by pressing the **START** button or ready to enter in **Programming** mode by pressing the **SET** button.
The GREEN LED ON indicates that the Timer is ready for both operations (**Ready**).

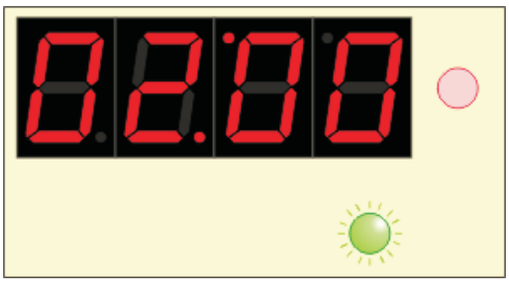

BOTH DOTS ARE FLASHING *(Countdown in progress)*

Indicate that the Timer is running and the flashing of the dots marks the seconds. During the countdown it is possible to PAUSE the Timer (and therefore deactivate the relay) by pressing the **STOP** button.

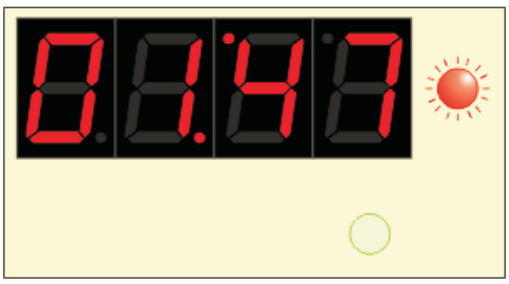

LOWER DOT ON *(Pause Timer)*

The lower dot ON when the **STOP** button is pressed to PAUSE the Timer.

In this situation, by pressing the **START** button the Timer restarts from the point at which it was interrupted while pressing again the **STOP** button the count is reset, the relay deactivates, the GREEN LED ON and the Timer is ready to be started (**Ready**)

UPPER DOT ON *(Opened Panel)*

The high dot is ON when the door of the bromograph or the box is opened. To manage the opening of the panel it is necessary to connect a microswitch on the **M3** (**MW**) terminal socket: the microswitch must have **N**ormally **C**losed contacts when it's pressed or when the door is properly closed. In other words, the contacts on the **M3** terminal block must be closed for the Timer to work. Every time the door of the bromograph is opened, the relay is deactivated and the GREEN LED goes out to indicate that the Timer is not ready. If you do not want to manage the opening of the door, it is necessary to short the pins of the **M3** (**MW**) terminal socket with a wire jumper.

NO DOTS and LOWER SEGMENTS ON *(Programming mode)*

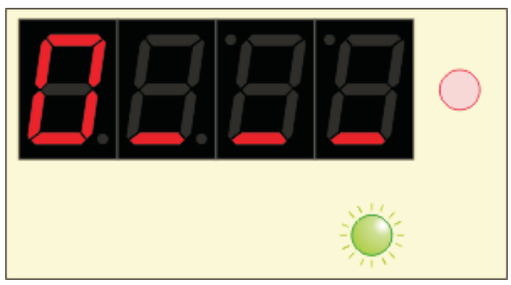

By pressing the **SET** button, you enter the **PROGRAMMING mode** and the display appears as shown in the figure.
Press the ▶ (START) button to change the position of the single digit or
press the ▲ (STOP) button to enter a value from **0** to **9** on the selected digit.

Press the **SET** button again to **exit the PROGRAMMIN mode** and return to the Timer ready.

***NOTE** - It's not possible to enter **Programming mode** if the contactsin the **M3** terminal socket are open.*

SET THE AUDIO SCAN (of the SECONDS)

When the **Audio Scan of Seconds** is activated, the buzzer emits a short acoustic signal every second (a classic "toc").
To activate the **Audio Scan of Seconds**, press and hold the **STOP** button and press the **SET** button at the same time, then release both. Each time this procedure is performed, the number "0" or "1" showns briefly on the last display as shown in the following figures (by default, the **Audio Scan** is set to "0").

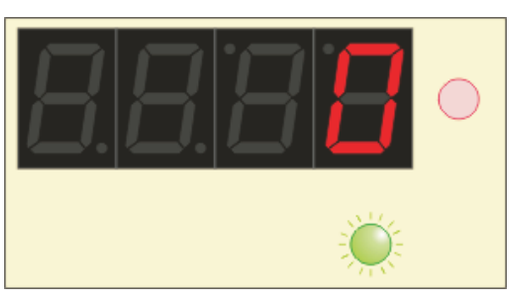

*AUDIO SCAN **DISABLED***

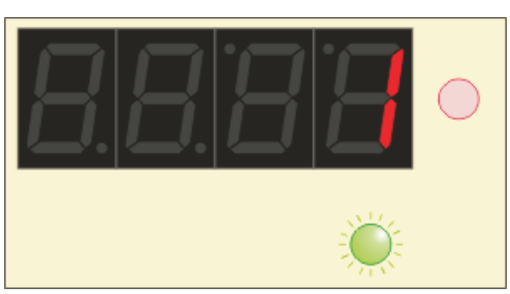

*AUDIO SCAN **ENABLED***

THE LEDS OF TIMER

There are TWO LED in the Timer:

- The **RED LED is ON** ONLY when the **relay is activated**.
- The **GREEN LED ON** indicates that the Timer is **ready to be activated** or ready to enter in **PROGRAMMING mode**.

PCB VERSION MADE READY FOR WALL OR CONTAINER INSTALLATION

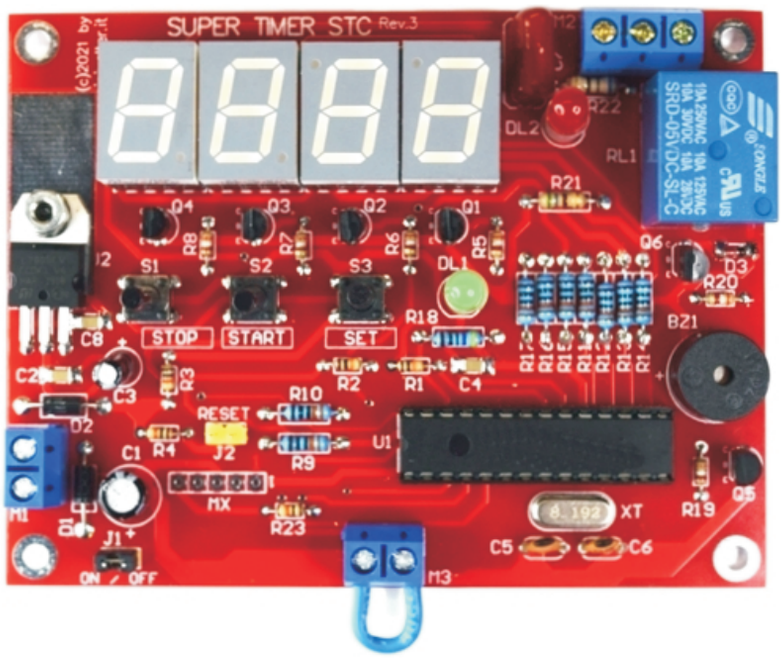

PCB VERSION MADE READY FOR INSTALLATION TO A CONTROL PANEL

In this version, the terminal blocks, the connectors and the buzzer are solded in the Bottom side.

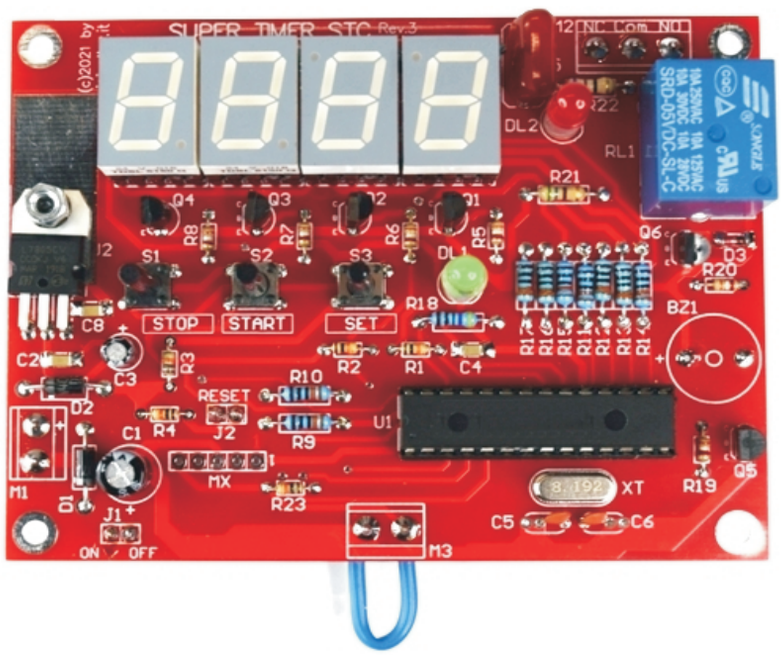

COMMAND BUTTONS and LEDs

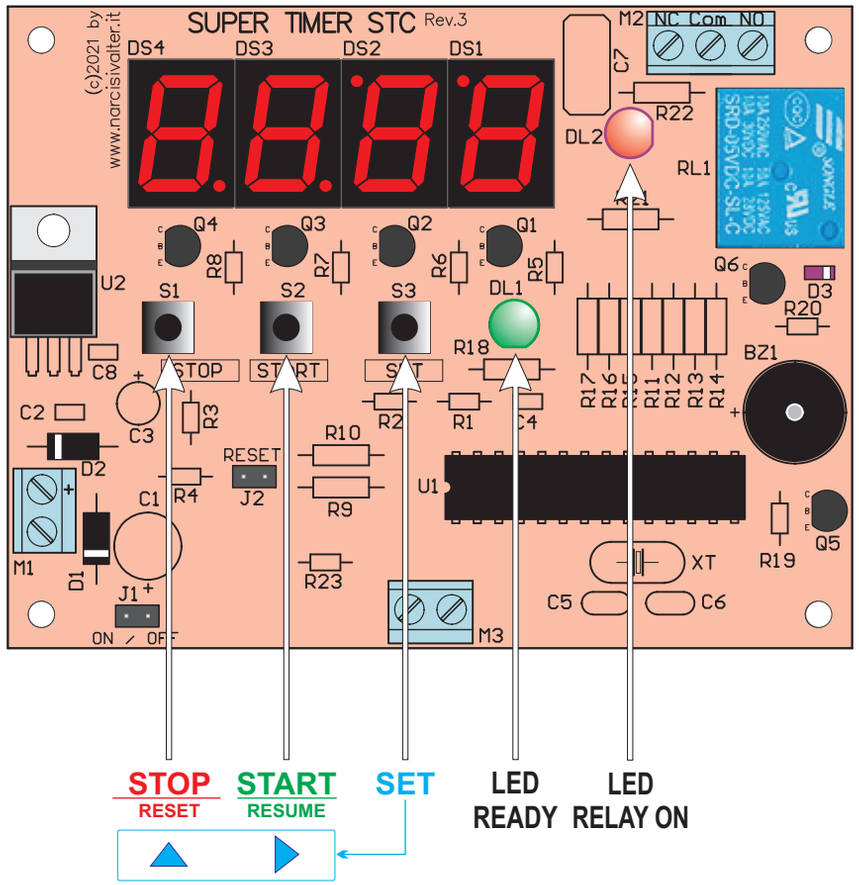

WIRING

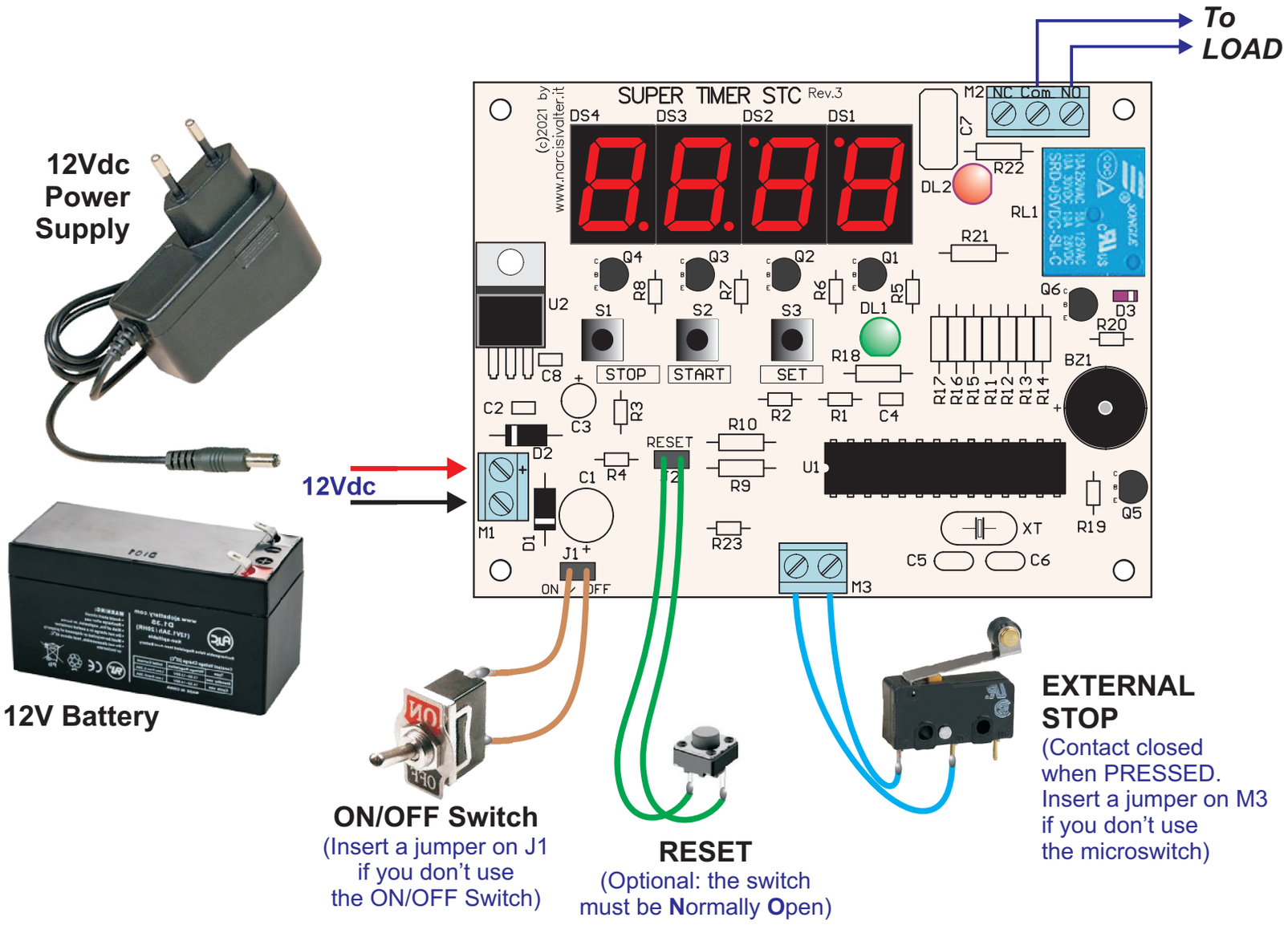

To
LOAD
12Vdc
Power
Supply
12V Battery
12Vdc
SUPER TIMER STC Rev.3
(c)2021 by
www.narcisivalter.it
DS4
DS3
DS2
DS1
M2
NC Com NO
C7
R22
DL2
RL1
R21
Q4
Q3
Q2
Q1
R8
R7
R6
R5
U2
S1
S2
S3
DL1
Q6
D3
R20
R18
BZ1
C8
STOP
START
SET
R17
R16
R15
R11
R12
R13
R14
C2
C3
R3
R2
R1
C4
D2
RESET
R10
U1
C1
R4
R9
M1
D1
J1
R23
XT
R19
Q5
C5
C6
M3
ON
OFF
ON/OFF Switch
(Insert a jumper on J1
if you don't use
the ON/OFF Switch)
RESET
(Optional: the switch
must be Normally Open)
EXTERNAL
STOP
(Contact closed
when PRESSED.
Insert a jumper on M3
if you don't use
the microswitch)

HOW TO CONNECT AN EXTERNAL RELAY

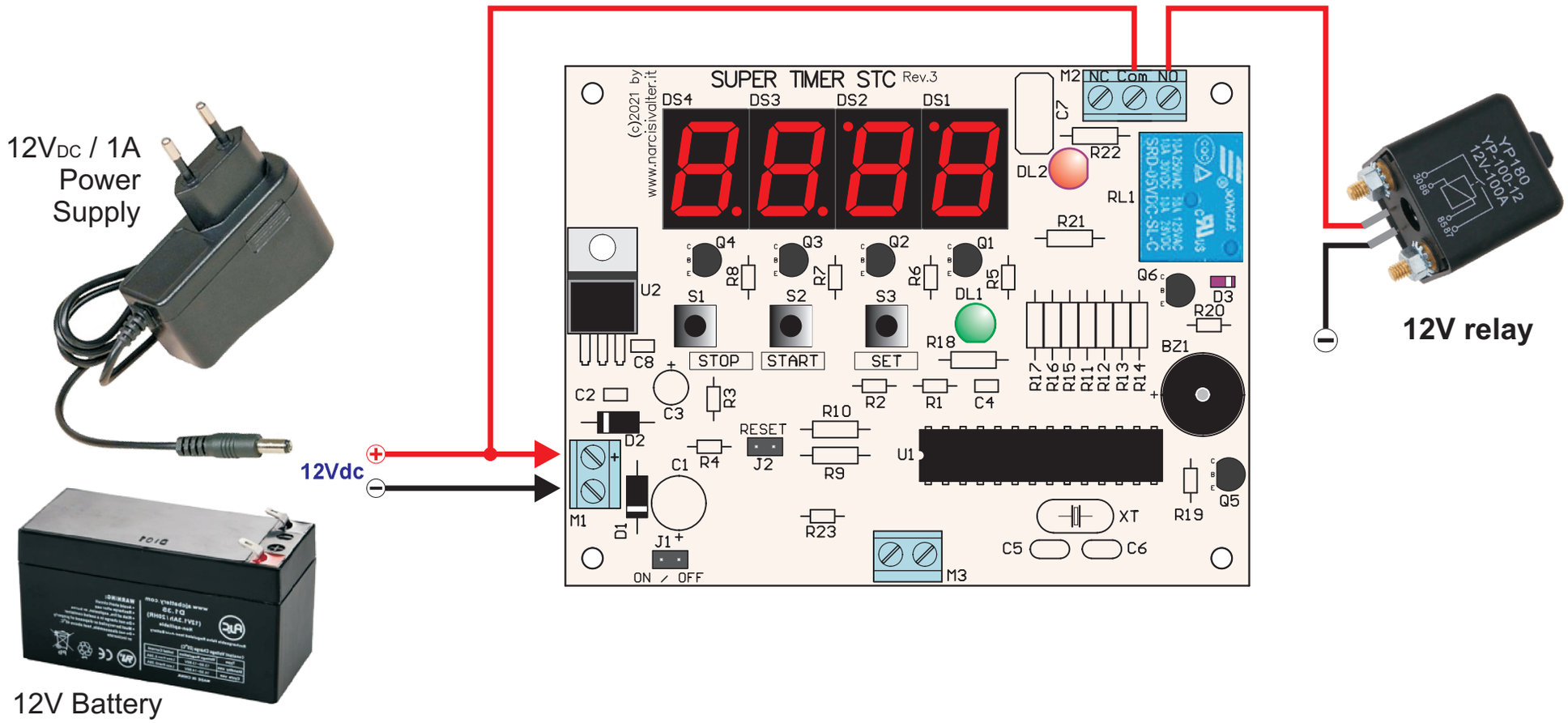

SAMPLE OF HIGH VOLTAGE CONNECTION (110-220 Vac)
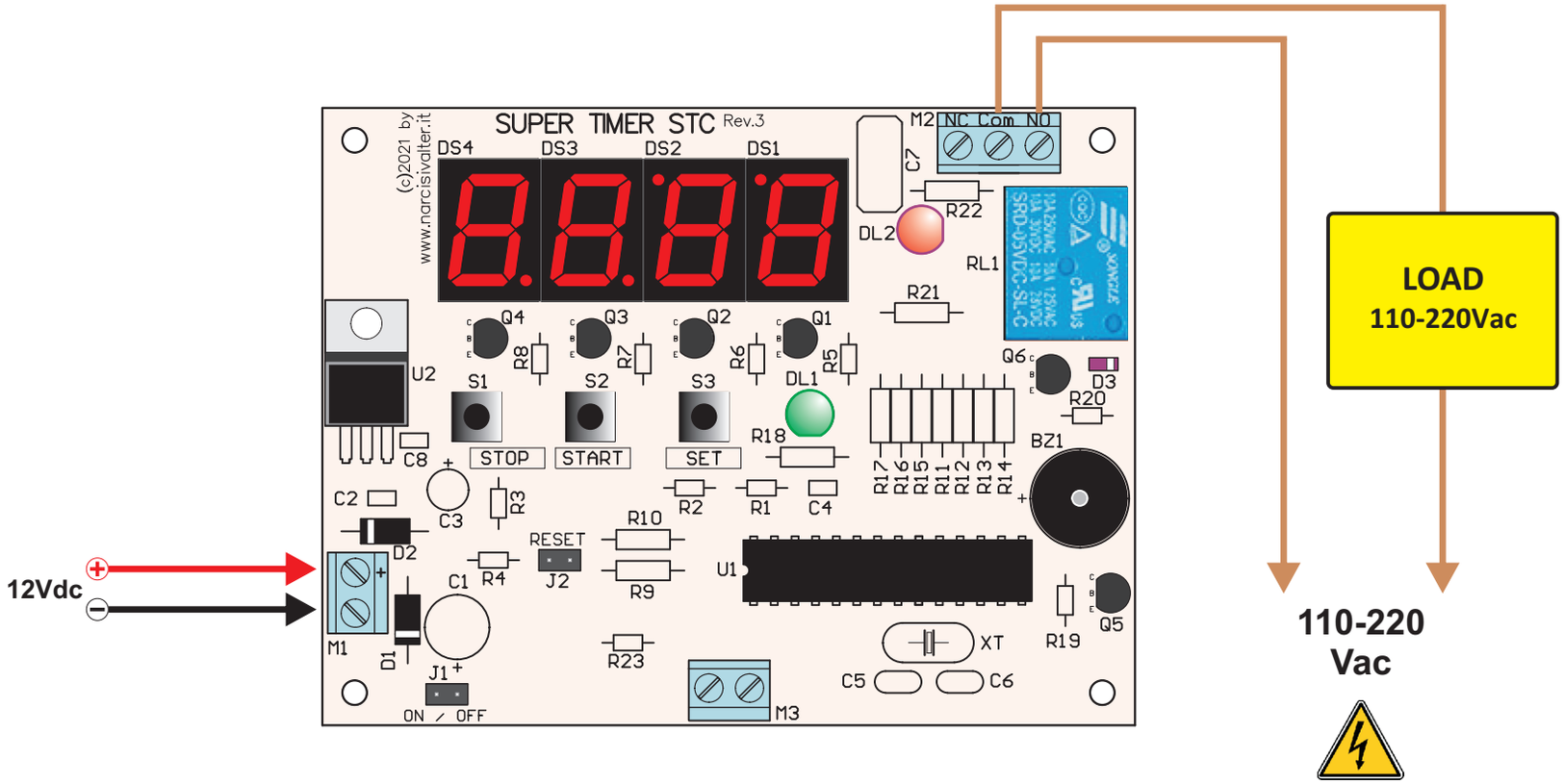
WARNING - MAINS VOLTAGE !
Every connection and every intervention with HIGH VOLTAGE must be performed only by EXPERT STAFF